As we saw in the design flow, what differentiates between synthesis and PnR steps is that we "route" between the different blocks (i.e. use wires). These wires add delay that we need to analyze.

The types of data that a wire in a chip can carry are:

1) Signals: these are the information-carrying wires.

2) power: VDD and ground.

3) Clock.

Notes:

- Power wires carry DC signals, so the concept of wire delay does not exist, once they reached all blocks there is no need to care about delay (unlike signals and clocks).
- Power wires carry a large amount of current.

Most of the signals propagate through "metal" wires. As we saw in memories, sometimes we may route using polysilicon or diffusion layers, but metal wires are the most dominant.

Remember that the structure shown below is the typical structure we used to study delay before:

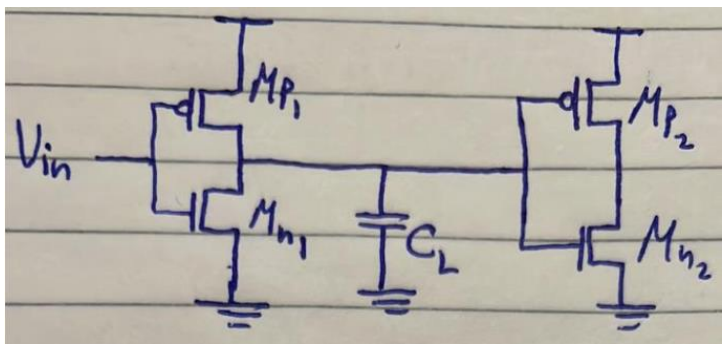

We said that the capacitance at the output node of the first gate C_L is due to the drain capacitance of M_{p1} and M_{n1} as well as the gate capacitance of M_{p2} and M_{n2}. For resistance, we said that the resistance in the charging case is that of M_{p1} and in the discharging case is that ofM_{n1}. So, notice that we did not talk about the wire at the output of the first gate. This wire actually introduces resistance and capacitance that we should include in our delay analysis.

Resistance and Capacitance of a Wire

The general structure of a wire is as shown below. It has a length L, width W, and thickness t_w. It is at a height t from the substrate, which depends on the layer the wire is in. So, the higher the layer the wire is in, the larger t is.

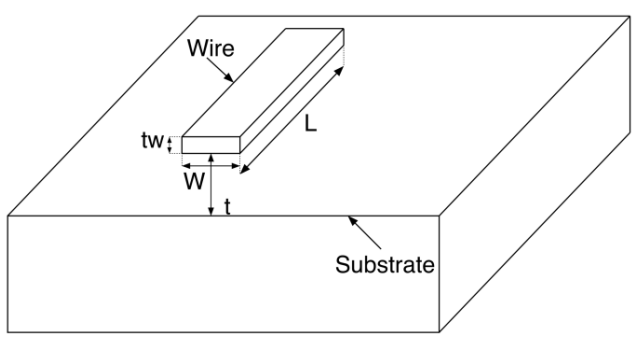

Wire Capacitance

So, where is the capacitance exactly? the capacitance is formed between the wire and substrate. That is, one plate is the wire, the other plate is the substrate, the spacing between them is the spacing of the capacitor, and the permittivity ϵ of the space between them is that of the insulator used, which is given by $\epsilon = \epsilon_o \epsilon_r$. Thus, the wire capacitance is given by:

$$C_{wire} = \frac{\epsilon A}{d} = \frac{\epsilon_o \epsilon_r W L}{t}$$

ϵ_r is the relative permittivity of the insulator used. Some insulators are shown below:

Material	Relative permittivity
Vacuum	1
air	1.0006
Polyethelene	2.25
Polypropylene	2.3
Mylar	3.1
Silicon Dioxide	3.9
Silicon	11.7
Water	55

We usually like to divide any expression into technology and design parameters (i.e. parameters that depend on the technology used, and parameters that we can play with as designers):

$$\therefore C_{wire} = \frac{\epsilon_o \epsilon_r WL}{t} = \frac{\epsilon_o \epsilon_r}{t} WL = \{C_a\}\{WL\}$$

C_a: capacitance per unit area of the wire. Tab leeh C_a is considered a tecnhology parameter? 3ashan C_a de hateb2a constant for each metal layer per technology. ϵ de constant wel t heya el distance men el substrate to each layer, which will also be constant per technology. Notice that as we go to higher metal layers, C_a decreases. sa3at keteer bardo bn3ml keda:

$$C_{wire} = \frac{\epsilon_o \epsilon_r WL}{t} = \frac{\epsilon_o \epsilon_r W}{t} L = \{C_l\}\{L\}$$

C_l: capacitance per unit length of the wire. Tab leeh C_l is considered a technology parameter? 3ashan hena bene3teber en el W hateb2a constant bel minimum possible width, wel L heya bs el variable 7asab el wire hay travel 2ad eh. We usually do this (i.e. use minimum possible width) so that we can fit many wires together.

So, which parameters in the capacitance equation we can use to decrease the wire capacitance?

W: for sure we want to decrease it, but there is a minimum length for W defined by the technology's DRCs.

L: for sure we want to decrease it, but it is not in our hand, it depends on the placement and routing that took place for the different blocks, once it is made the wire length is defined and cannot be decreased.

t: defined by the technology and fab, so to change it we need to change the technology or the fab.

ϵ_r: it is easy to say "let's use polyethylene for example since its ϵ_r is relatively small". However, it is easier to fabricate using silicon dioxide, so it is the insulator usually used.

Wire Resistance

In memories, we said that the resistance of a metal wire is negligible, and we considered it only with polysilicon and diffusion layers. However, we will now know that, in modern technologies, we cannot neglect the wire resistance even in metal layers due to two reasons:

1. Skin effect.

2. Scaling of wires.

$$R = \frac{\rho L}{A} = \frac{L}{\sigma W t_w}$$

σ: conductivity of the metal used with the wire.

Again, we divide it into technology and design parameters:

$$R = \frac{L}{\sigma W t_w} = \frac{1}{\sigma t_w} \cdot \frac{L}{W} = \{R_s\}\{\frac{L}{W}\}$$

R_s: sheet resistance. It is also called square resistance because it is the resistance of a wire whose $L = W$.

1. Skin Effect

Kol el resistance model el ben7otaha beneb2a assuming en el current is uniformly distributed along the wire cross section, However, this is only true in case of DC currents. In case of AC currents, current flows only on a portion of the wire's cross section called "skin depth". As frequency increases, the skin depth decreases, which means the current flows in a thinner and thinner skin. This is shown below:

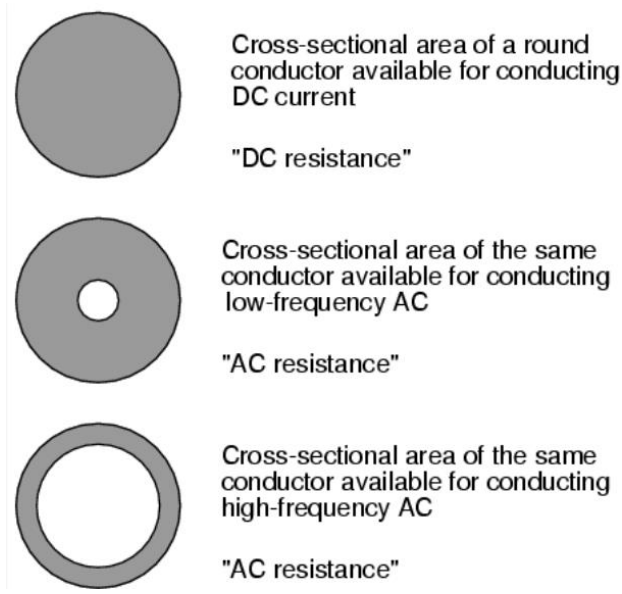

We will use the following simplified model for skin depth (i.e. the area which the current flows in):

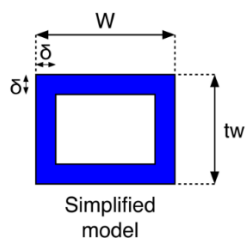

where the skin depth δ is given by:

$$\delta = \sqrt{\frac{1}{\pi f \mu \sigma}}$$

It is clear that, as frequency increases, the skin depth decreases.

So, what is the impact of the skin depth effect on the wire resistance? as frequency increases (i.e. as technology advances), skin depth decreases, the effective area that the current flows in decreases, and hence resistance increases (since $R \propto \frac{1}{A}$). This shows that the area that the current flows in is no longer Wt_w as we assumed before, instead:

$$A_{eff} = 2W\delta + 2t_w\delta - 4\delta^2$$

$$\therefore R = \frac{L}{\sigma(2W\delta + 2t_w\delta - 4\delta^2)}$$

Looking at the simplified model, when does skin depth effect take place? when:

$$\delta < \frac{W}{2} \; or \; \delta < \frac{t_w}{2}$$

$$\therefore \delta < \frac{\min(W, t_w)}{2}$$

$$\sqrt{\frac{1}{\pi f \mu \sigma}} < \frac{\min(W, t_w)}{2}$$

$$f > \frac{4}{\pi\mu\sigma\,(\,\min(W, t_w)\,)^2}$$

So, if we are operating at a frequency greater than $\frac{4}{\pi\mu\sigma\,(\,\min(W,t_w)\,)^2}$, we will suffer from skin depth effect. Otherwise, $R = \frac{L}{\sigma W t_w}$ as usual.

So, a wire's resistance is not negligible when it is a non-metallic wire OR it is a metallic wire operating at high frequency that causes it to suffer from skin effect.

2. Wires Scaling

We know from Moore's law that the number of transistors on a chip increases every now and then. The reason we believe why this happens is that the transistor size decreases every now and then. However, the other reason that not many talks about is that the chips size increases as well every now and then! that is, the number of transistors on a chip increases every now and then because the transistor size is decreasing AS WELL AS the chips size is increasing. What is the impact of increasing chips size? there are two types of wires:

1. Short (Local) Wires: short-range interconnects that connect components that are physically close to each other such as adjacent components on the same circuit block.
2. Long (Global) Wires: long-range interconnects that connect components that are farther apart from each other such as connecting different blocks or modules within a chip.

Notice that local wires shrink down as technology scales down. Imagine a wire connecting the NMOS and PMOS transistors in an inverter standard cell. Since the transistors are shrinking down, we are bringing them nearer to each other and hence the interconnection between them shrinks down. On the other hand, global wires expand as technology scales down because the chip becomes larger as we said. Thus, let's analyze the impact of this on delay for both types of wires:

Short Wires

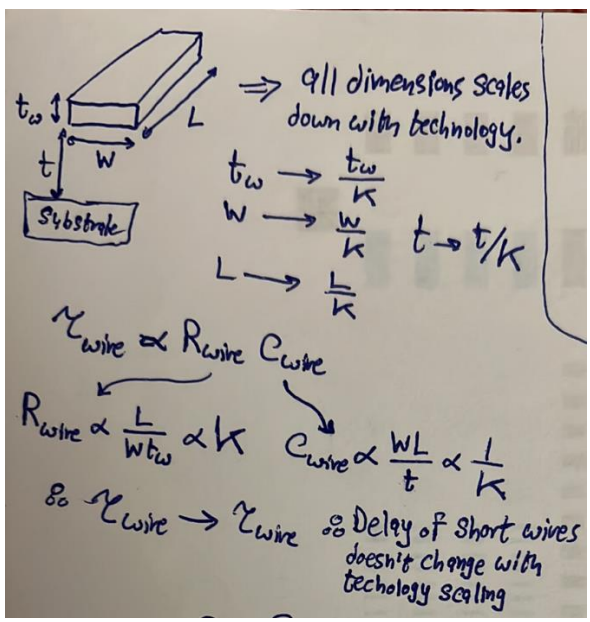

So, is this something good or bad? very bad because this means that, as technology advances, wires delay becomes more and more dominant, which is the case nowadays as shown below:

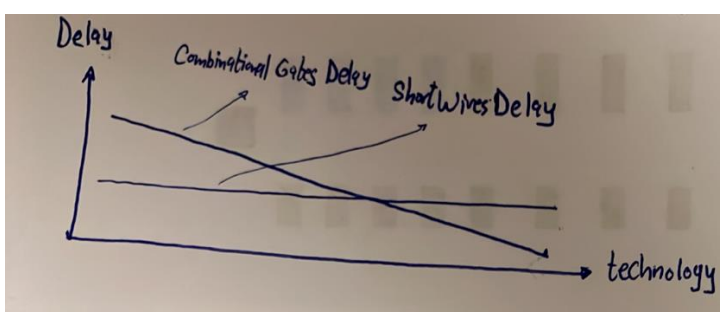

Long Wires

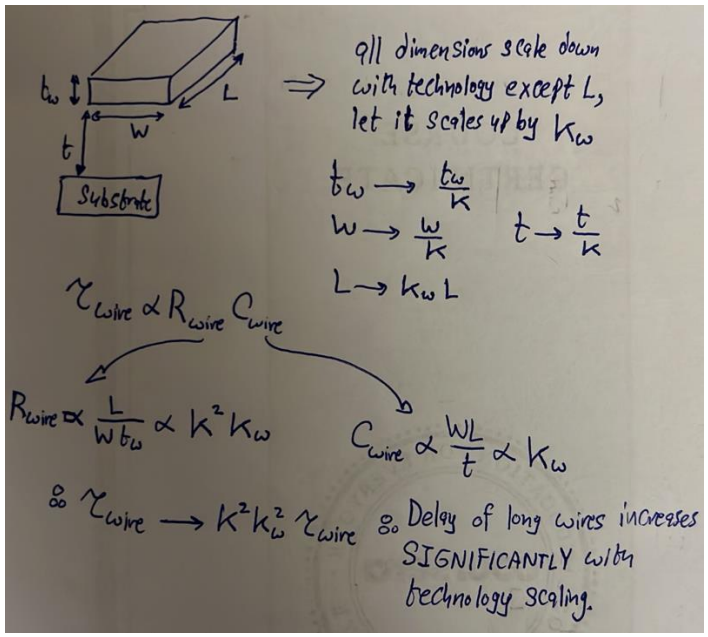

What made delay of long wires increase significantly with technology scaling? resistance! resistance increases significantly as technology scales and that's why we should no longer neglect the resistance of even metal wires!

Wires delay became the significant source of delay in modern chips!

How can we solve this problem? if you look closely, you will find that we shouldn't have scaled t_w down because scaling it down does not actually benefit us in any aspect. On the contrary, it increases the wire resistance in both short and long wires. Thus, we shouldn't scale it down. So, why don't we even increase it so that we decrease short and long wires delay? because increasing t_w contributes to a type of capacitance called *interwire capacitance.*

Interwire Capacitance

Another type of capacitance that is introduced due to wires is "interwire capacitance". This is different from wire capacitance as interwire capacitance is a capacitor that is formed between two wires moving adjacent to each other as shown below, where the two plates of the capacitor are the lateral faces of both wires. This kind of capacitance does not introduce delay as wire capacitance, but it introduces crosstalk/interference between two adjacent wires.

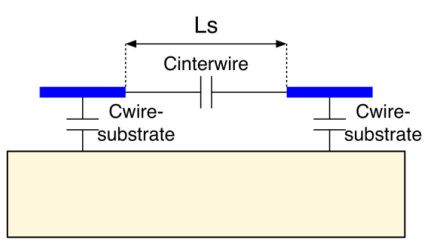

$$C_{interwire} = \frac{\epsilon t_w L}{L_{sep}}$$

L: common length between the two wires.

L_{sep}: separation length between the two wires.

So, notice that:

1. increasing t_w would increase $C_{interwire}$, that's why we can't just increase it to decrease wires delay.
2. In old technologies, L_{sep} was large so $C_{interwire}$ was not much effective. In modern technologies, L_{sep} becomes small as we get things nearer to each other.

Thus, the structure becomes as shown below in modern technologies:

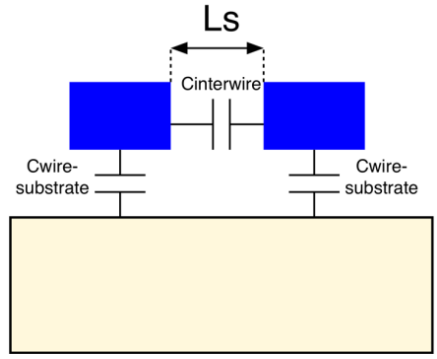

which creates larger interwire capacitance compared to old technologies.

So, scaling down t_w does not make any sense because it just increases wires delay, but at the same time we cannot scale it up because this contributes to the interwire capacitance. So, again, how can we solve the problem of large wiring delay? → *hierarchical routing.*

Hierarchical Routing

As shown below, the solution is to have a hierarchy of wires. This hierarchy depends on the idea that, as we go higher in metal layers, wires become more thick so that they have less resistance. And to avoid increasing their interwire capacitance, they also become more separated. This way, wires in the upper metal layers have less resistance and hence can be used for global routing, while wires in lower metal layers are used for local routing.

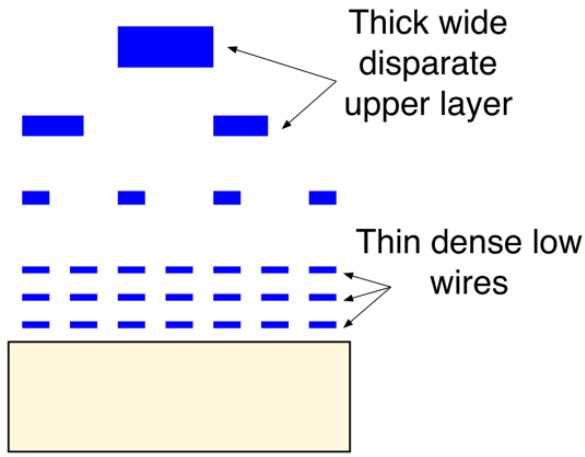

So, we are now convinced that a wire has resistance and capacitance that we must include in delay calculations. So, how exactly should we model a wire's resistance and capacitance? the most exact way is to model it as an infinite number of pi sections as shown below:

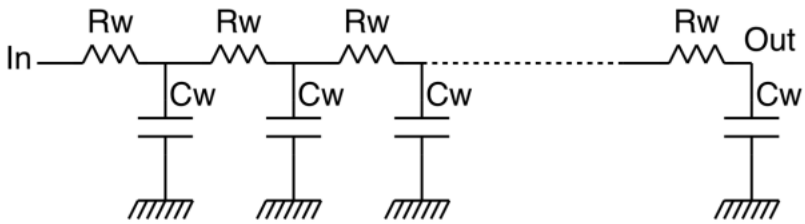

Where R_w and C_w are the resistance and capacitance of each pi section, respectively.

However, in most cases, we will make an approximation to simplify calculations and use just 1 pi section to represent a wire delay as shown below:

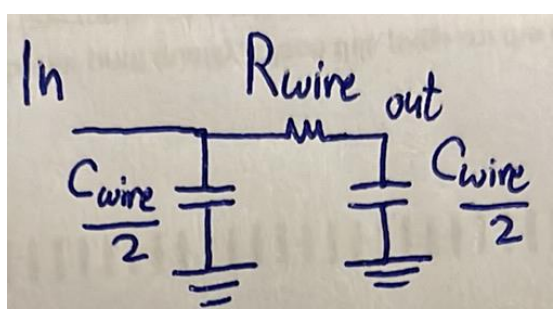

and then we can use Elmore time constant to calculate the time constant. Check the screenshot below to revise:

ELMORE TIME CONSTANT

➤ Thus, the four partial time-constants

$$\tau_1 = C_1 R_1$$
$$\tau_2 = C_2 R_1$$
$$\tau_3 = C_3(R_1 + R_3)$$
$$\tau_4 = C_4(R_1 + R_3 + R_4)$$

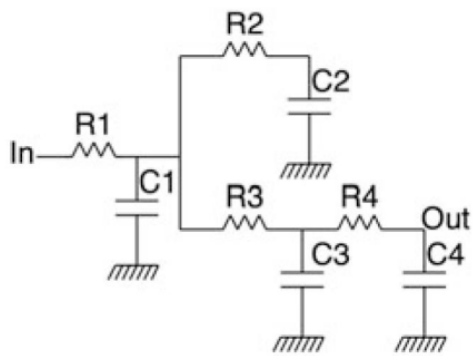

$$\tau = R_1(C_1 + C_2 + C_3 + C_4) + R_3(C_3 + C_4) + R_4 C_4$$

We need to study "elmore time constant". Kol el circuits el kona benet3amel m3aha l7d delwa2ty kanet betewsal le shakl resistor w capacitor fa kona ben2ol en el time constant howa RC. Tyb complex circuit zy el mawgooda t7t de ne7seb el time constant beta3ha ezay? fa Elmore da 2alak 3la tare2a 7elwa 3ashan te7seb el time constant:

1) Define the input and output of your circuit. Notice that input and output here doesn't mean the actual inputs and outputs, the output means the node that is to be charged/discharged, and the input means the node that will charge/discharge the output.

2) The overall time constant is the summation of the time constant of each capacitor in the circuit. But how can we calculate the time constant of a capacitor? betersem path men el input lel output w path men el input lel capacitor da, el resistance el moshtaraka been el 2 paths heya de el resistance el hayshofha el cap. Thus, the time constant will be as shown below.

So now let's take the traditional example of cascaded inverters to compare its time constant before and after including the wire delay:

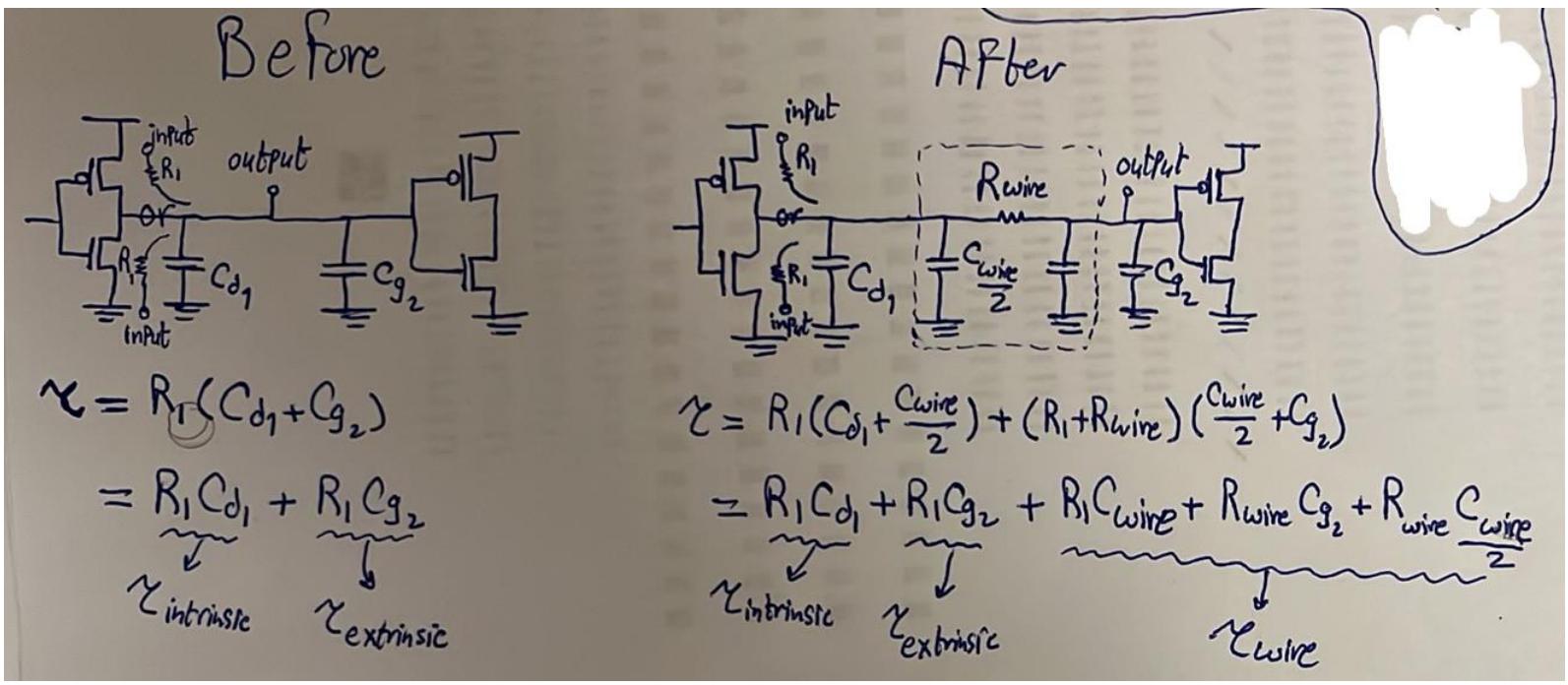

Notice enena bene7seb el time constant at the input of the second gate not the output of the first gate because this is what really matters.

Ground and Supply Bounce

As we know, ground and V_{DD} pins of any chip travel to all cells in the design. These pins carry large currents because they drive and sink all cells in the design. That is, any cell that wants to charge its output capacitance from $'0'$ to $'1'$, it draws current from V_{DD}, and any cell that wants to discharge its output capacitance from $'1'$ to $'0'$, it sinks current to the ground. So, V_{DD} and ground pins carry large currents. As we said before, we are not concerned about delay in these pins because once they have reached all cells, the concept of delays does not exist. So, we do not care about capacitance in the V_{DD} and ground pins. However, we care much about resistance in these pins because resistance in these pins would cause a large voltage drop (since I is large) which would cause the supply voltage to effectively decrease and the ground voltage to effectively increase. This would make supply and ground levels come closer to each other which would accordingly suffocates noise margins.

All pins on a chip see a large inductance due to on-chip effects, such as bonding wires, and off-chip effects, such as PCB tracks, as shown below.

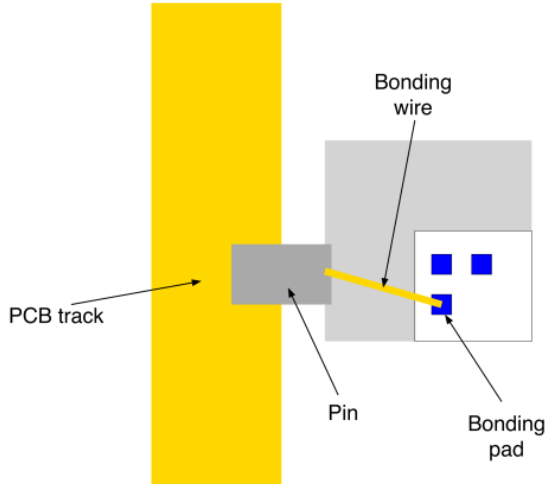

However, the pins that suffer the most from this inductance are the V_{DD} and ground pins. Why? because they see large variations in the current, and we know that $V_{inductor} = L\frac{dI}{dt}$. Thus, these inductors cause large voltage drops since the variations in the current are large as shown below.

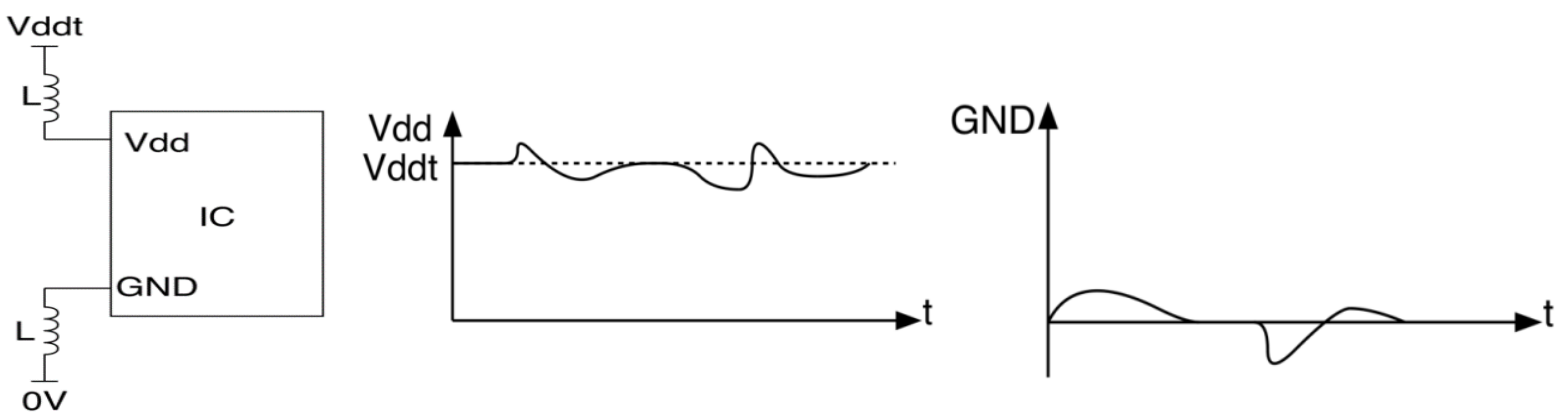
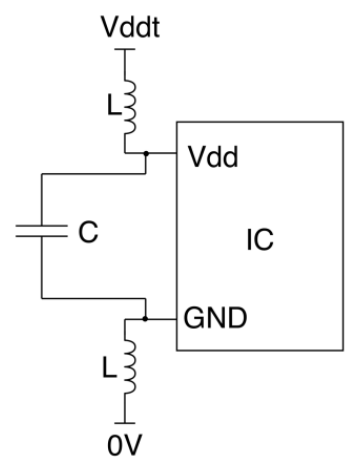
Solution? the solution is to use a decoupling capacitor as shown on the right. Watch this from 10:45 to the end.